LT.	BY	DATE	REVISION
A	RW	03/15/12	ADDED METRIC DIMS

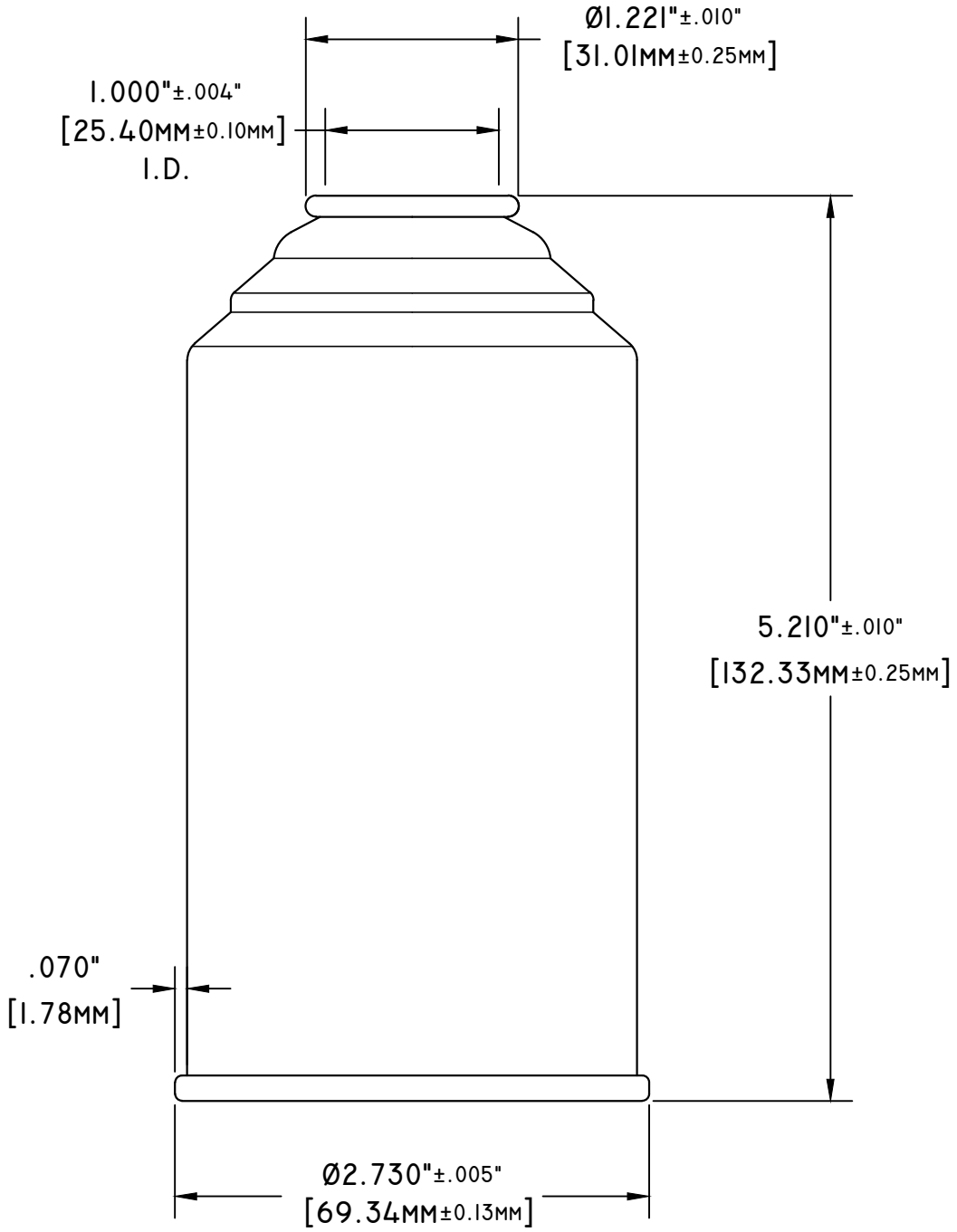

NOTES:
1 - DOT RATING: 2Q
2 - BURST: 270 PSI [18.6 BAR] MIN.
3 - CAPACITY: 375ML / 22.88 CU IN

DRAWN BY: S.T.	ITW SEXTON	3101 Sexton Road Decatur, AL. 35603-1453 Phone: (256)355-5850 Fax: (256)351-8730		The green logo indicates a controlled document. If the logo appears black, this page is considered to be used for training or reference only.
CHECKED BY:				
APPROVED BY:				
TOLERANCES (EXCEPT AS NOTED)				
DECIMAL XXX .005	TITLE: 211 x 406 AEROSOL WITH DROC BOTTOM. (A16)			
DECIMAL XX .01	LINE#: NA	DATE: 2/10/06	DRAWING NUMBER : 998D0016	A
ANGLE .25°	SCALE: 1 : 1	MATERIAL: NA		